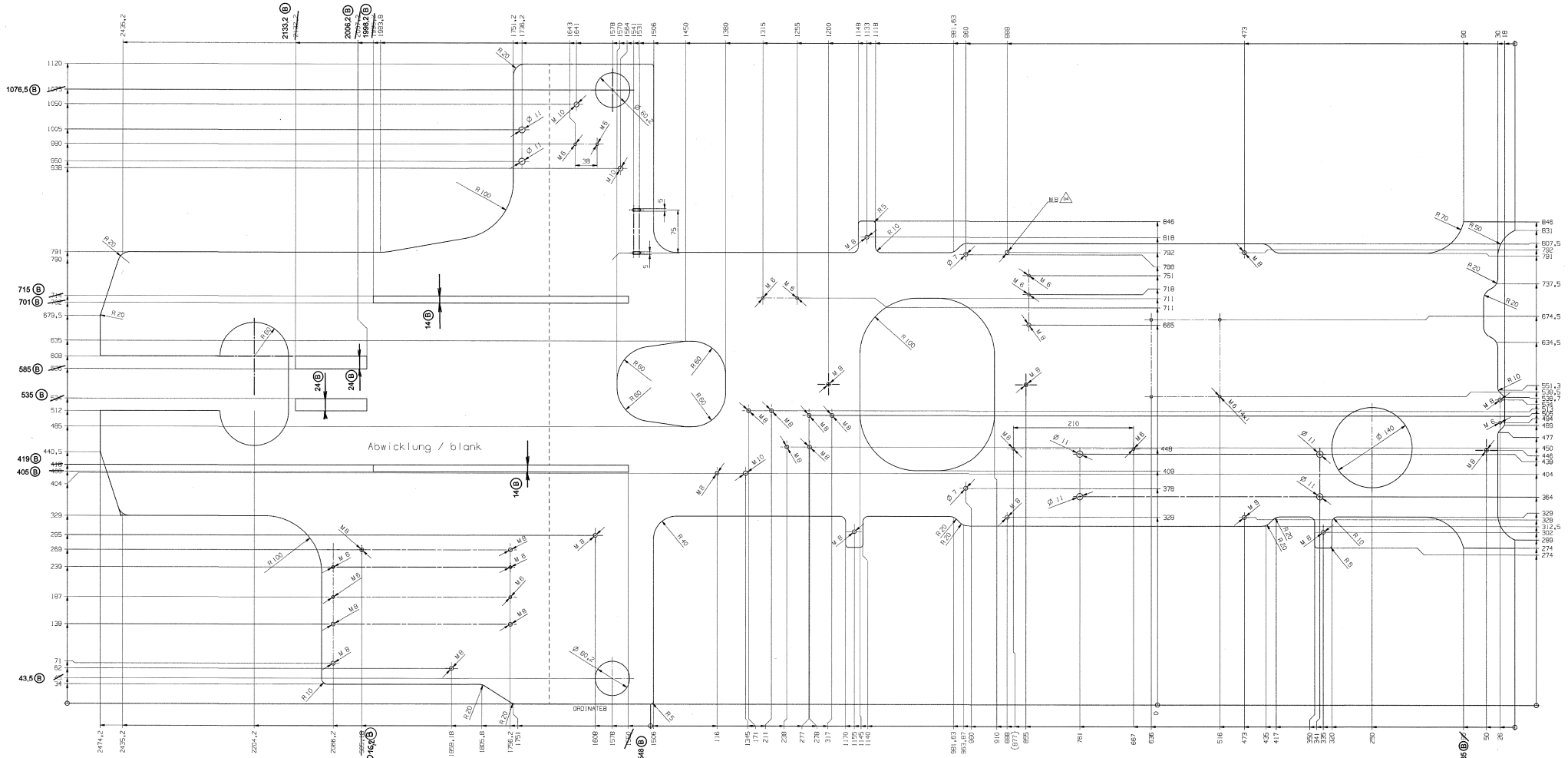

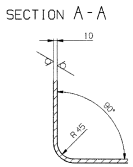

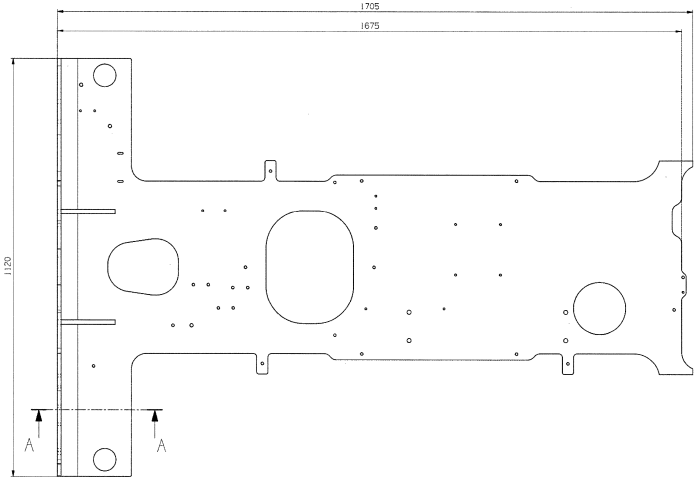

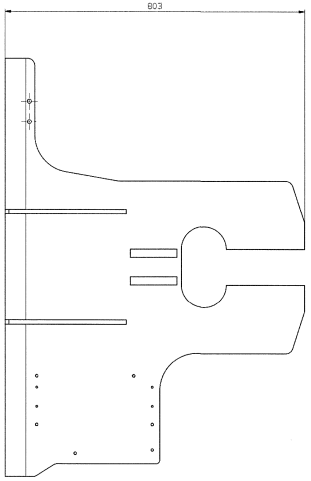

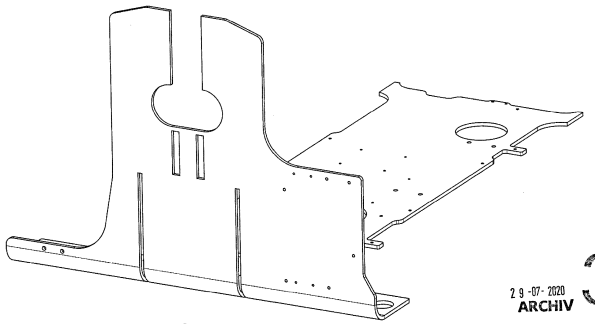

29 -07- 2020
ARCHIV
3

Ⓑ- ZM/20/00255-ÚPRAVA DÍLU NA ZÁKLADĚ POŽADAVKU VÝROBY.

29.6.2020 HRUBÝ Z.

Ra 12,5

Contour according to DXF-File

				APPROVED FOR (F4) free for series	
				Welding Construction according to "Werkmann 1.3" Surface Quality according to "Werkmann 4.0" Floor Weight according to "Werkmann 5.1" Material according to "Werkmann 5.1"	7000001.02
Projection see ISO 128	Name	Date	Material: B510	DIN ISO 7200/01.02	1
Scale 1:5 / Sheet Size A0	Created LAZSCHWAV	19Mar2020	Surface Quality: RCHU RUAH	Scale	Count
	Approved LAZSCHWAV	19Mar2020	Standard Color	Floor Weight Ind. 98,2	
Bend Tolerance DIN 2015	Name Obergurt				
Welding Tolerance DIN ISO 13920-B					
Cement Tolerance DIN ISO 2768 - mK					
Surface Condition DIN EN ISO 1302					
Laser-Cut Tolerance DIN EN ISO 9013 K2	Additional Text JSI			Sheet 1 OF 3	
	Plot-Nr.		Doc-Nr 2000383490	Version 04	

The reproduction, distribution and use of this document as well as the communication of its contents to others without express authorization is prohibited. Offenders will be held liable for the payment of damages. All rights reserved in the event of the grant of a patent utility model or design.